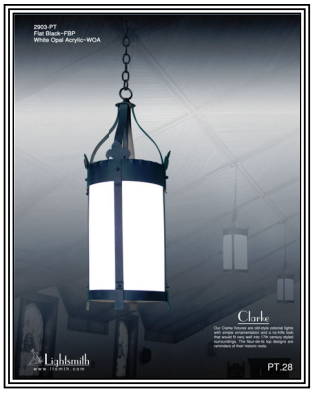

Clarke

2901-PT~2916-PT

Our Clarke fixtures are modest designs by today's standards. They would have looked just right in a 17th century American church. Blacksmiths would have forged them. And the acrylic might have been glass or mica. We most often build these lights to look like wrought iron for that very reason. A colonial church design would look right with a forged black lantern featuring minimal decoration. The simple nature of these fixtures does not stop us from building massive amounts of light into them. Our LED options are the most powerful thing going right now. Try them and see.

~Clarke Series~

- Chandelier:2941-CHT~2972-CHT
- Pendant:2901-PT~2916-PT
- Ceiling Mt:2904-CT~2917-CT
- Wall Mt:2901-WT~2913-WT
- S-Pendant:2903-ST~2915-ST

Mounting: Lightsmith fixtures mount to standard 4" octagon electrical boxes unless otherwise specified. All hardware and canopies supplied.

Listing and Warranty: Lightsmith fixtures are Underwriters Laboratories listed and carry a standard three year warranty against defects in materials and labor beginning at date of shipment.

MADE IN USA

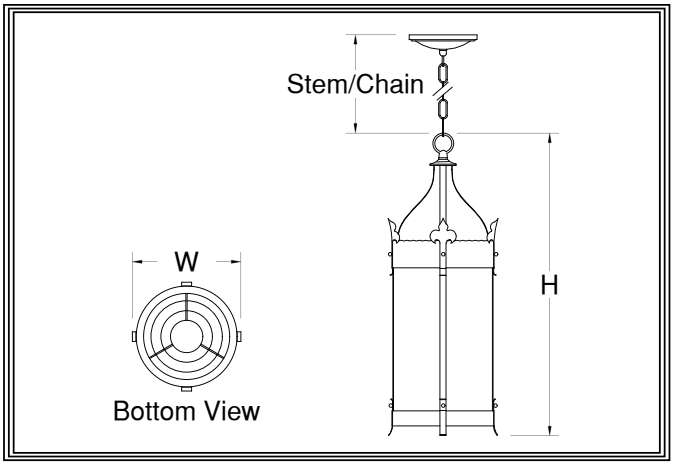

29___-PT
Fixture Number

Job Type

Job Name

Notes~Modifications

	Fixture Number	Dimensions	Lamping	Weight	Stem/Chain	Options
LED	☐ 2901-PT	9w x 25h	2-13wL(2820 lm)	29 lbs	3' Std	IEM,REM,SPR**
LED	☐ 2902-PT	11w x 31h	4-13wL(5640 lm)/1-38wC(5734 lm)	33 lbs	6' Std	L313
LED	☐ 2903-PT	13w x 37h	6-13wL(8460 lm)/1-38wC(5734 lm)	42 lbs	9' Std	L313
LED	☐ 2904-PT	15w x 43h	12-13wL(16920 lm)/1-52wC(9375 lm)	57 lbs	9' Std	L323
LED	☐ 2905-PT	17w x 49h	12-13wL(16920 lm)/1-83wC(12597 lm)	71 lbs	12' Std	L323
INCANDESCENT	☐ 2908-PT	9w x 25h	1-150wA(1200 lm)	24 lbs	3' Std	L38
INCANDESCENT	☐ 2910-PT	11w x 31h	3-75wA(3600 lm)/1-250wP38(3600 lm)	29 lbs	6' Std	L52,L310
INCANDESCENT	☐ 2912-PT	13w x 37h	6-75wA(7200 lm)/1-250wP38(3600 lm)	38 lbs	9' Std	L52,L610
INCANDESCENT	☐ 2914-PT	15w x 43h	6-75wA(7200 lm)/1-500wR40(5000 lm)	47 lbs	9' Std	L83,L610
INCANDESCENT	☐ 2916-PT	17w x 49h	9-75wA(10800 lm)/1-500wR40(5000 lm)	62 lbs	12' Std	L83,L910
FLUORESCENT	☐					
FLUORESCENT	☐					
FLUORESCENT	☐					
FLUORESCENT	☐					
FLUORESCENT	☐					

~Two Circuits Standard Wiring~

**All LED Fixtures

DIFFUSER

- ☐ **BGA:** Beige Alabaster Acrylic
- ☐ **NHA:** Natural Horn Acrylic
- ☐ **WHA:** White Alabaster Acrylic
- ☐ **HNA:** Honey Alabaster Acrylic
- ☐ **WOA:** White Opal Acrylic
- ☐ **GRA:** Green Edge Acrylic
- ☐ **EGA:** Earth Green Acrylic
- ☐ **DGA:** Deep Gold Acrylic
- ☐ **SOG:** Streaked Opal Glass
- ☐ **WOG:** White Opal Glass
- ☐ **ECH:** Etched*

**Etched option creates a matte, non-glossy finish on one side of the diffuser. (Example:WOA-ECH)*

METAL FINISH

SOLID BRASS FINISHES	PAINTED METAL FINISHES	ALUMINUM FINISHES	STAINLESS STEEL FINISHES
☐ **ABB:** Antique Brass	☐ **DGP:** Dark Green	☐ **SAA:** Satin Aluminum	☐ **NA**
☐ **SBB:** Satin Brass	☐ **VGP:** Verde Green	☐ **SNA:** Satin Nickel	☐
☐ **PBB:** Polished Brass	☐ **CGP:** Charcoal Gray	☐ **PAA:** Polished Aluminum	☐
☐ **ANB:** Antique Nickel	☐ **MBP:** Medium Bronze	☐ **BBA:** Burnished Bronze	☐
☐ **SNB:** Satin Nickel	☐ **SBP:** Satin Black	☐ **RNA:** Red Naval Bronze	☐
☐ **PNB:** Polished Nickel	☐ **DBP:** Dark Bronze	☐ **SGA:** Satin Gold	☐
☐ **AZB:** Antique Bronze	☐ **LBP:** Light Bronze	☐ **SBA:** Satin Bronze	☐
☐ **SZB:** Satin Bronze	☐ **MGP:** Medium Gold	☐ **ORA:** Oil Rubbed Bronze	☐
☐ **PZB:** Polished Bronze	☐ **SCP:** Sponged Copper	☐ **SCA:** Satin Copper	☐
☐ **CSB:** Custom Brass*	☐ **CSP:** Custom Paint*	☐ **CSA:** Custom Aluminum*	☐

OPTIONS

- ☐ **L38:** 38wLED R40 Downlight
- ☐ **L52:** 52wLED R40 Downlight
- ☐ **L83:** 83wLED R40 Downlight
- ☐ **DIM:** Dimming Driver (std)
- ☐ **REM:** Remote Emer.Driver
- ☐ **L313:** 3-13wCLED Uplight
- ☐ **L323:** 3-23wCLED Uplight
- ☐ **L310:** 3-10wLED A-lamp
- ☐ **L610:** 6-10wLED A-lamp
- ☐ **L910:** 9-10wLED A-lamp
- ☐ **SPR:** Surge protector
- ☐ **IEM:** Integral Emer.Ballast

Fixture Specifications

29___-PT	~		~		~		~		~	
FIXTURE NUMBER (Example: 2901-PT)		DIFFUSER (Example: BGA-ECH)		METAL FINISH (Example: ABB)		VOLTAGE ☐ (120V) ☐ (277V) ☐ (347V)		STEM=S+Lgth (Example:S-96") CHAIN=C+Lgth (Example:C-96") NR=Not required		OPTIONS (Example:DIM,REM)		MODIFICATIONS (Example:Custom Paint*) Use "Notes" Box At Top To Explain Modifications

Lightsmith
www.ltsmth.com
Manufacturers of Fine Custom Lighting ~ Ph:434-528-5809 ~ Fx:434-845-7907 ~ Web:Info@Ltsmth.com

©2018 Lightsmith