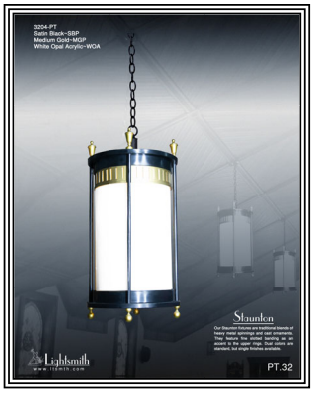

Staunton

3201-PT~3216-PT

Our Staunton fixtures feature layered rings leading into thick rolled bands leading into slotted peripheral bands. All this is held together by round rods that are attached to urn finials at top and ball finials at bottom. The overall result of all these components is a feeling of mass and sturdiness that permeates the entire light. We show Staunton as a two tone unit with darker color predominating and golds for accent. But the entire fixture can be solid polished brass or combinations of bright satin aluminum with polished brass details. We are totally adaptable. Many diffuser and metal types to choose from.

~Staunton Series~

- Chandelier:3241-CHT~3272-CHT
- Pendant:3201-PT~3216-PT
- Ceiling Mt:3204-CT~3217-CT
- Wall Mt:3201-WT~3213-WT
- S-Pendant:3203-ST~3215-ST

Mounting: Lightsmith fixtures mount to standard 4" octagon electrical boxes unless otherwise specified. All hardware and canopies supplied.

Listing and Warranty: Lightsmith fixtures are Underwriters Laboratories listed and carry a standard three year warranty against defects in materials and labor beginning at date of shipment.

MADE IN USA

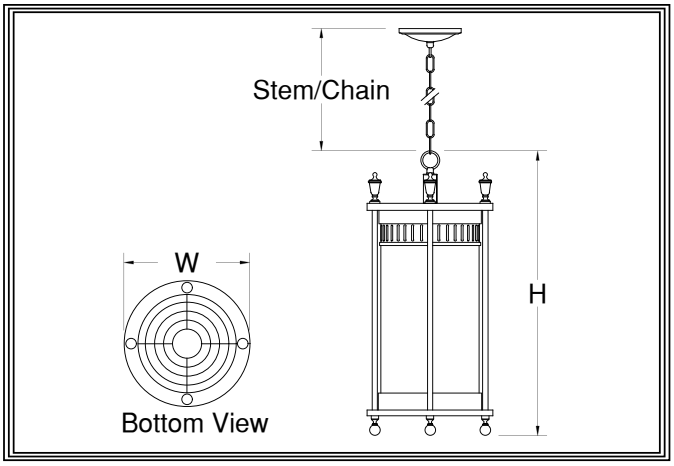

32___-PT
Fixture Number

Job Type

Job Name

Notes~Modifications

	Fixture Number	Dimensions	Lamping	Weight	Stem/Chain	Options
LED	3201-PT	10w x 23h	2-13wL(2820 lm)	27 lbs	3' Std	IEM,REM,SPR**
LED	3202-PT	13w x 29h	4-13wL(5640 lm)/1-38wC(5734 lm)	31 lbs	6' Std	L313
LED	3203-PT	15w x 35h	6-13wL(8460 lm)/1-38wC(5734 lm)	40 lbs	9' Std	L313
LED	3204-PT	18w x 41h	12-13wL(16920 lm)/1-52wC(9375 lm)	55 lbs	9' Std	L323
LED	3205-PT	20w x 46h	12-13wL(16920 lm)/1-83wC(12597 lm)	72 lbs	12' Std	L323
INCANDESCENT	3208-PT	10w x 23h	1-150wA(1200 lm)	24 lbs	3' Std	L38
INCANDESCENT	3210-PT	13w x 29h	3-75wA(3600 lm)/1-250wP38(3600 lm)	29 lbs	6' Std	L52,L310
INCANDESCENT	3212-PT	15w x 35h	6-75wA(7200 lm)/1-250wP38(3600 lm)	36 lbs	9' Std	L52,L610
INCANDESCENT	3214-PT	18w x 41h	6-75wA(7200 lm)/1-500wR40(5000 lm)	45 lbs	9' Std	L83,L610
INCANDESCENT	3216-PT	20w x 46h	9-75wA(10800 lm)/1-500wR40(5000 lm)	60 lbs	12' Std	L83,L910
FLUORESCENT						

~Two Circuits Standard Wiring~

**All LED Fixtures

DIFFUSER

- BGA: Beige Alabaster Acrylic
- NHA: Natural Horn Acrylic
- WHA: White Alabaster Acrylic
- HNA: Honey Alabaster Acrylic
- WOA: White Opal Acrylic
- GRA: Green Edge Acrylic
- EGA: Earth Green Acrylic
- DGA: Deep Gold Acrylic
- SOG: Streaked Opal Glass
- WOG: White Opal Glass
- ECH: Etched*

**Etched option creates a matte, non-glossy finish on one side of the diffuser. (Example:WOA-ECH)*

METAL FINISH

SOLID BRASS FINISHES	PAINTED METAL FINISHES	ALUMINUM FINISHES	STAINLESS STEEL FINISHES
ABB: Antique Brass	DGP: Dark Green	SAA: Satin Aluminum	NA
SBB: Satin Brass	VGP: Verde Green	SNA: Satin Nickel	
PBB: Polished Brass	CGP: Charcoal Gray	PAA: Polished Aluminum	
ANB: Antique Nickel	MBP: Medium Bronze	BBA: Burnished Bronze	
SNB: Satin Nickel	SBP: Satin Black	RNA: Red Naval Bronze	
PNB: Polished Nickel	DBP: Dark Bronze	SGA: Satin Gold	
AZB: Antique Bronze	LBP: Light Bronze	SBA: Satin Bronze	
SZB: Satin Bronze	MGP: Medium Gold	ORA: Oil Rubbed Bronze	
PZB: Polished Bronze	SCP: Sponged Copper	SCA: Satin Copper	
CSB: Custom Brass*	CSP: Custom Paint*	CSA: Custom Aluminum*	

OPTIONS

- L38: 38wLED R40 Downlight
- L52: 52wLED R40 Downlight
- L83: 83wLED R40 Downlight
- DIM: Dimming Driver (std)
- REM: Remote Emer.Driver
- L313: 3-13wCLED Uplight
- L323: 3-23wCLED Uplight
- L310: 3-10wLED A-lamp
- L610: 6-10wLED A-lamp
- L910: 9-10wLED A-lamp
- SPR: Surge protector
- IEM: Integral Emer.Ballast

Fixture Specifications

32___-PT	~		~		~		~		~	
FIXTURE NUMBER (Example: 3201-PT)		DIFFUSER (Example: BGA-ECH)		METAL FINISH (Example: ABB)		VOLTAGE (120V) (277V) (347V)		STEM=S+Lgth (Example:S-96") CHAIN=C+Lgth (Example:C-96") NR=Not required		OPTIONS (Example:DIM,REM)		MODIFICATIONS (Example:Custom Paint*) Use "Notes" Box At Top To Explain Modifications

Lightsmith
www.ltsmth.com
Manufacturers of Fine Custom Lighting ~ Ph:434-528-5809 ~ Fx:434-845-7907 ~ Web:Info@Ltsmth.com

©2018 Lightsmith